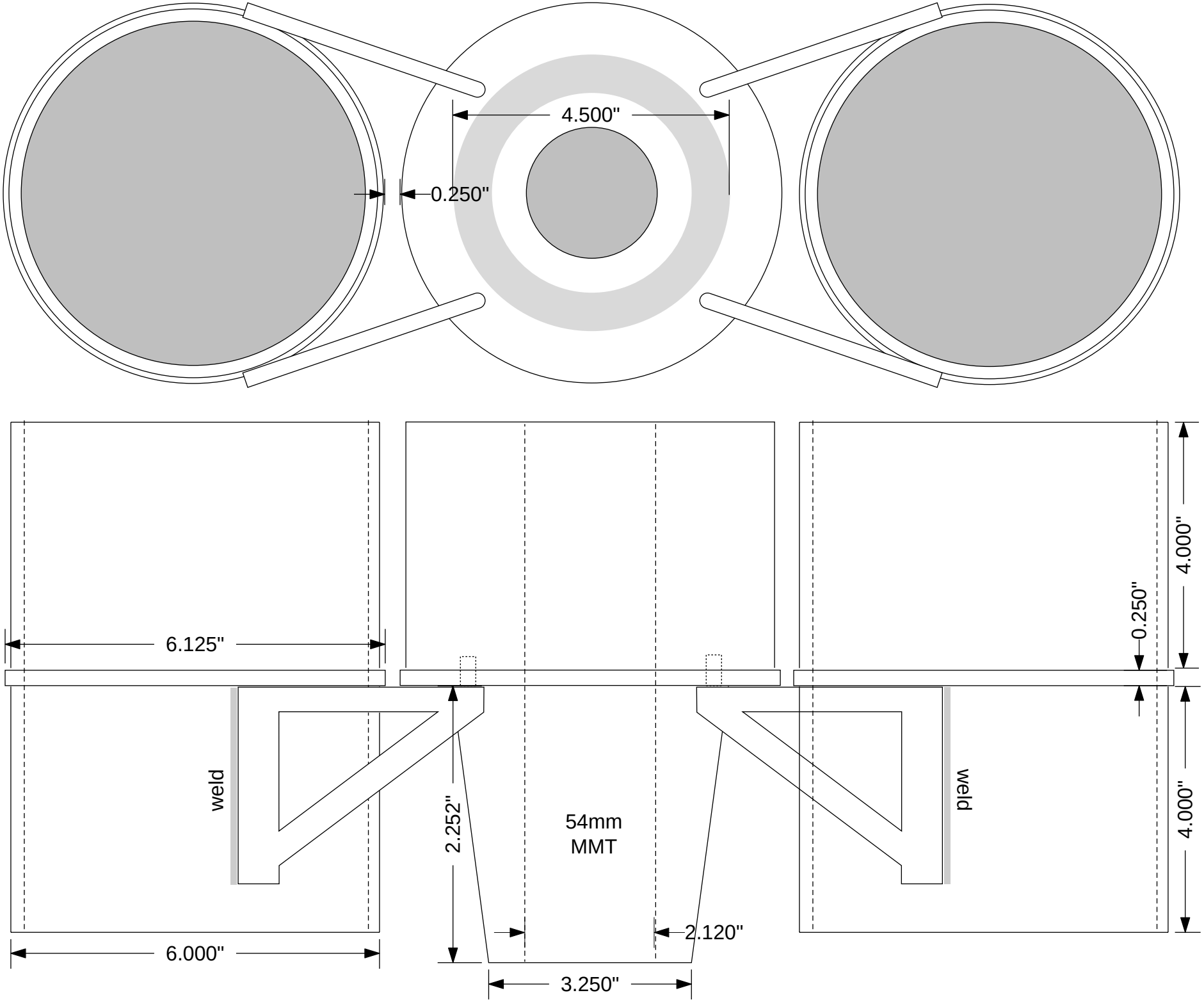
4.500"
0.250"
6.125"
weld
2.252"
54mm
MMT
2.120"
6.000"
3.250"
0.250"
4.000"
weld
4.000"