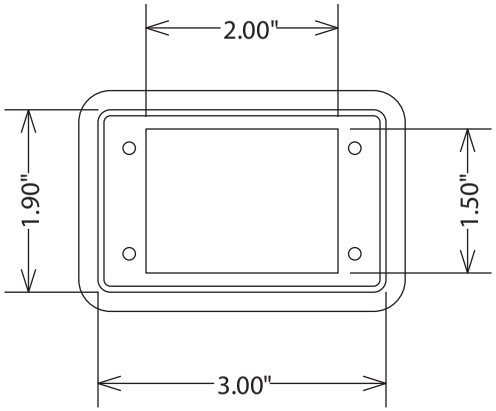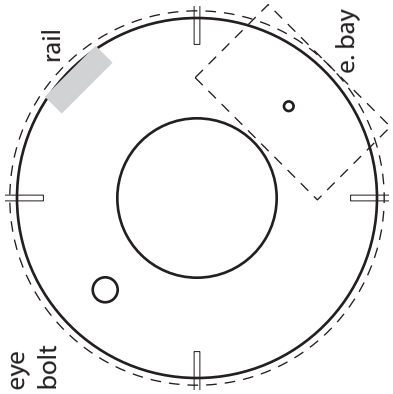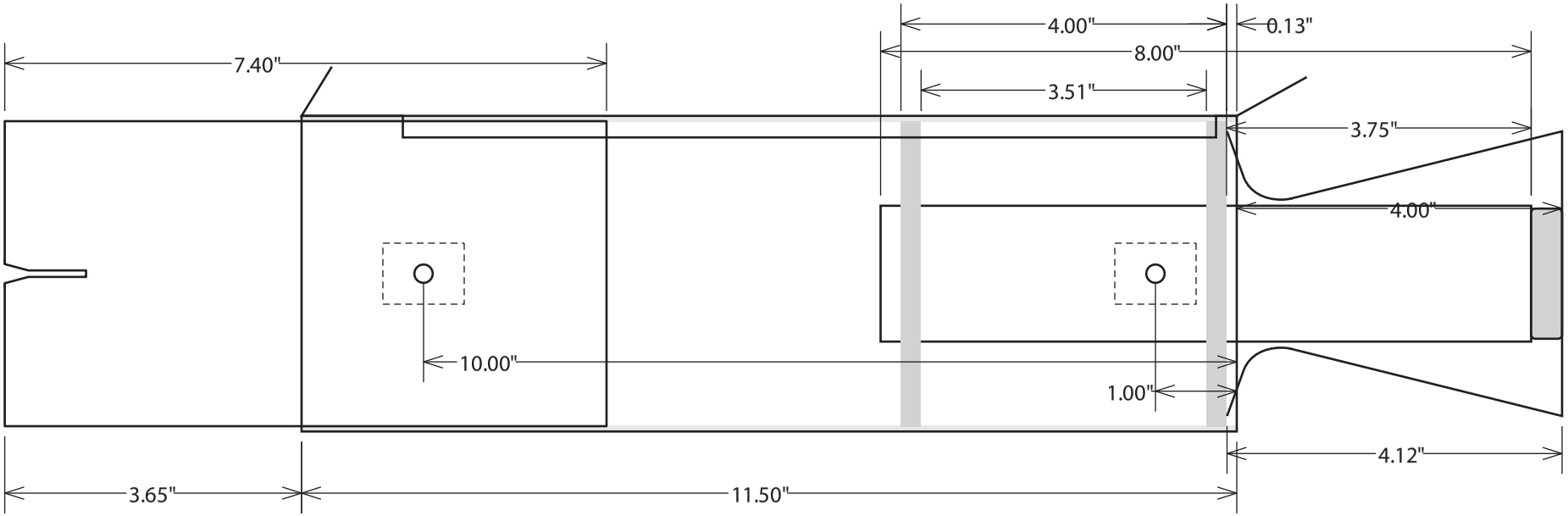Astrobee 500 2nd stage detail
John Coker • jcrocket.com